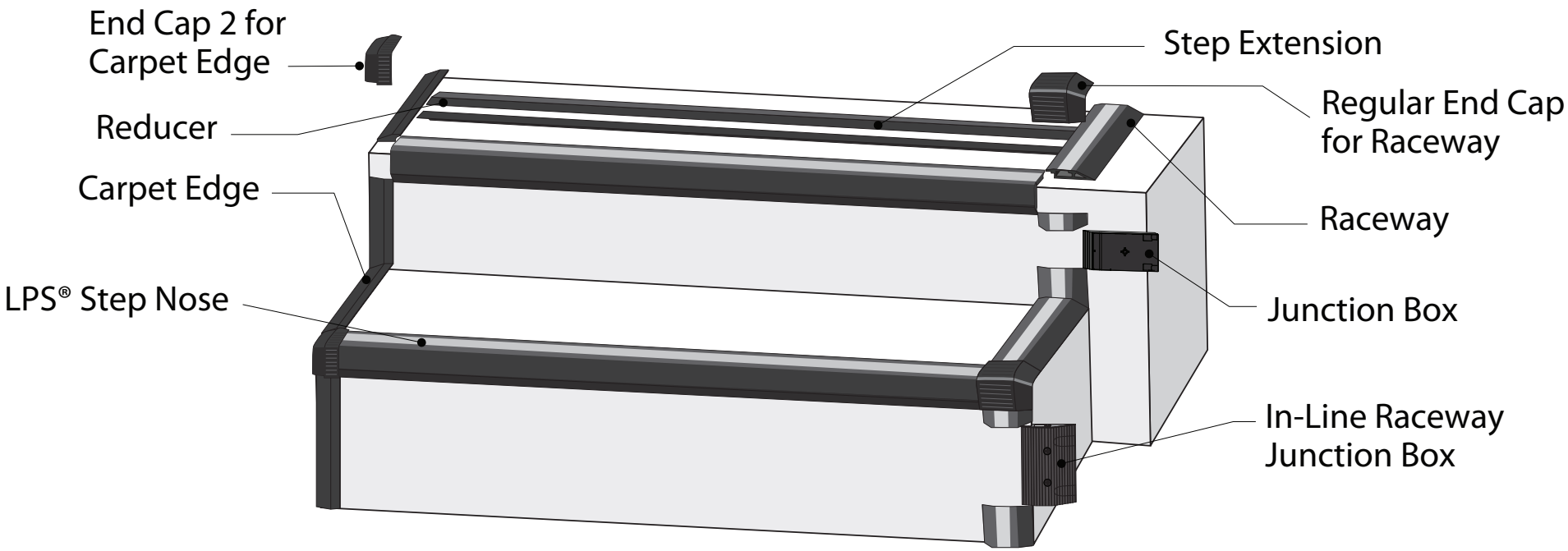
End Cap 2 for
Carpet Edge
Reducer
Carpet Edge
LPS® Step Nose
Step Extension
Regular End Cap
for Raceway
Raceway
Junction Box
In-Line Raceway
Junction Box