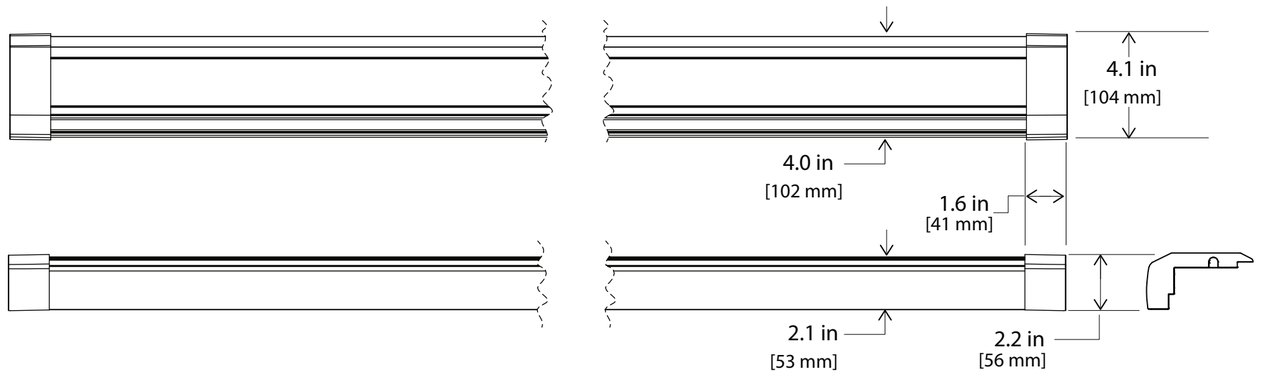
4.1 in
[104 mm]
4.0 in
[102 mm]
1.6 in
[41 mm]
2.1 in
[53 mm]
2.2 in
[56 mm]

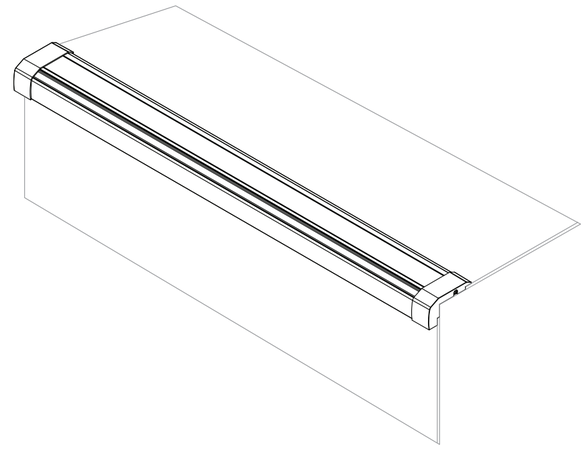

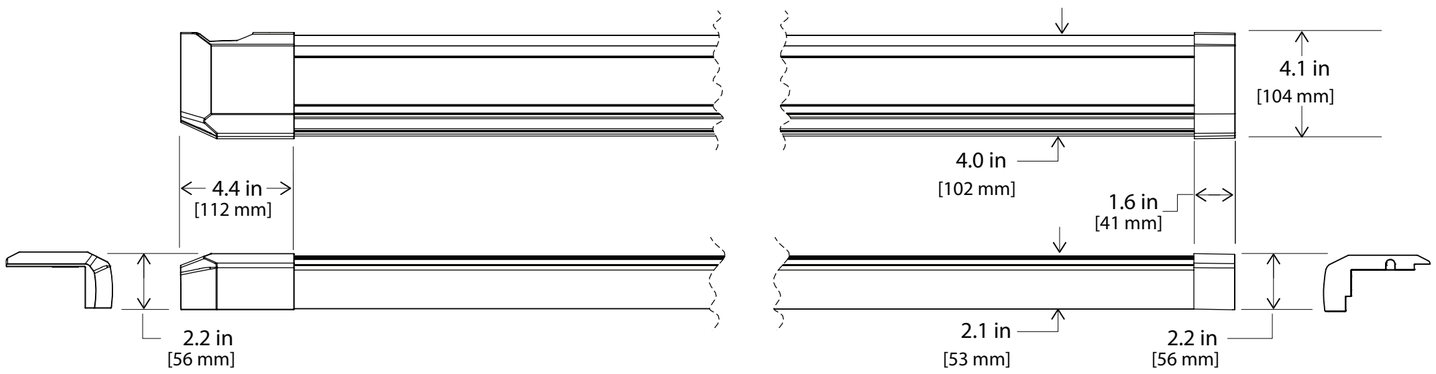
4.4 in
[112 mm]
2.2 in
[56 mm]
4.1 in
[104 mm]
4.0 in
[102 mm]
1.6 in
[41 mm]
2.1 in
[53 mm]
2.2 in
[56 mm]

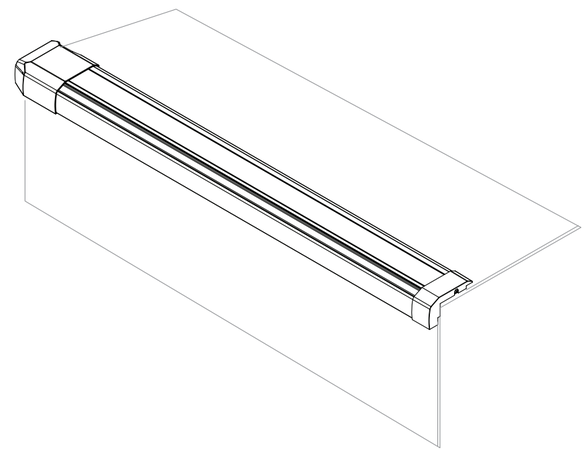

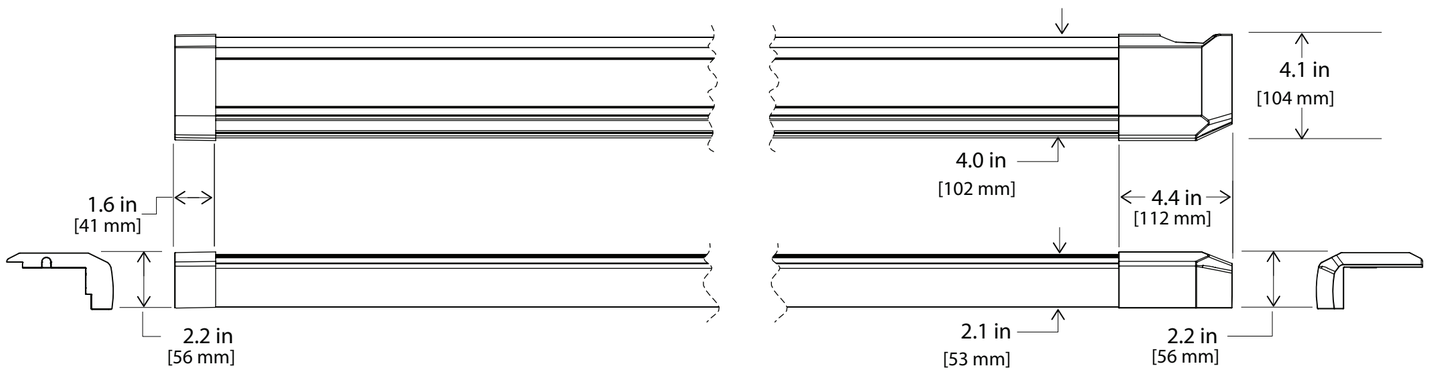
1.6 in
[41 mm]
2.2 in
[56 mm]
4.1 in
[104 mm]
4.0 in
[102 mm]
4.4 in
[112 mm]
2.1 in
[53 mm]
2.2 in
[56 mm]

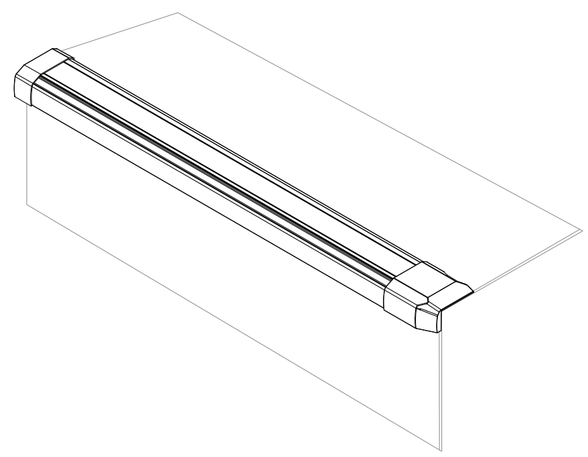

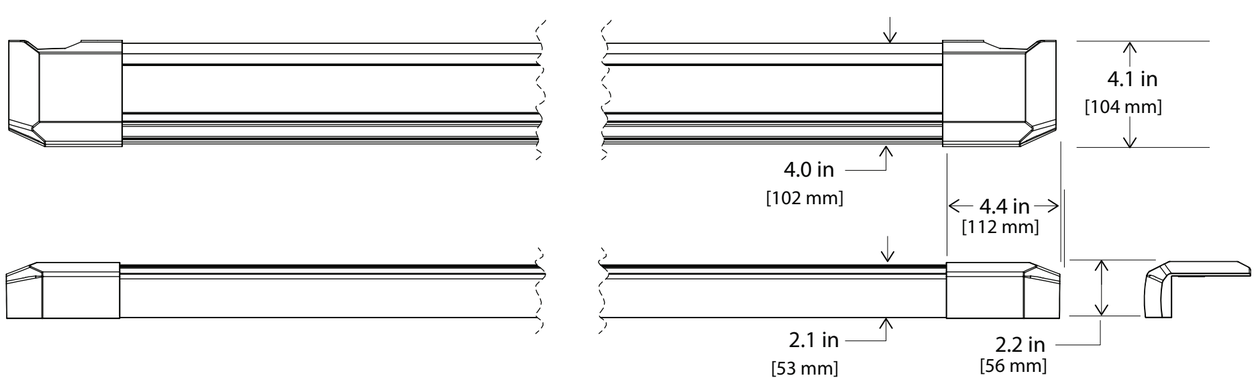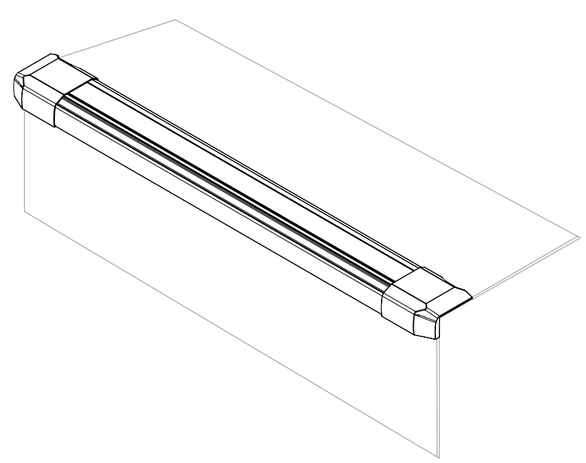
4.1 in
[104 mm]
4.0 in
[102 mm]
4.4 in
[112 mm]
2.1 in
[53 mm]
2.2 in
[56 mm]